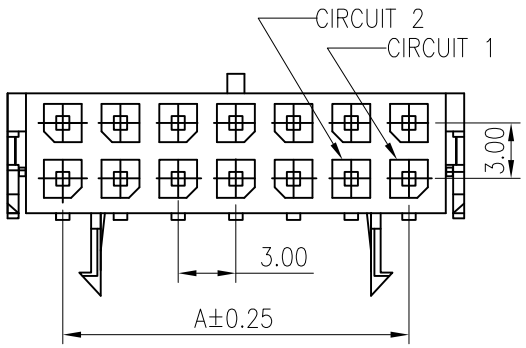

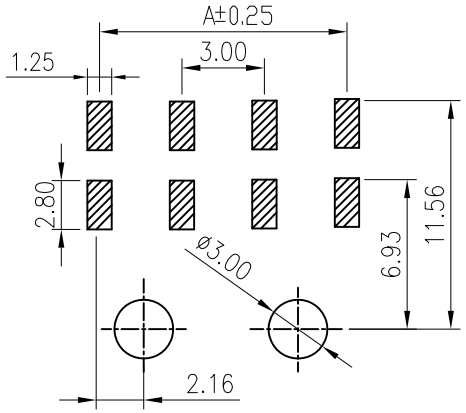

8P-24P P.C.B LAYOUT

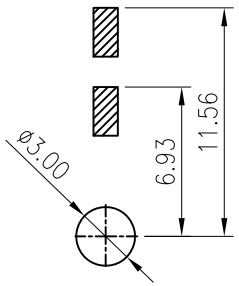

2P P.C.B LAYOUT

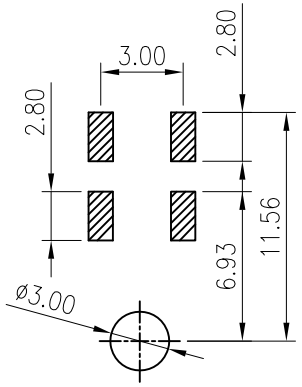

4P-6P P.C.B LAYOUT

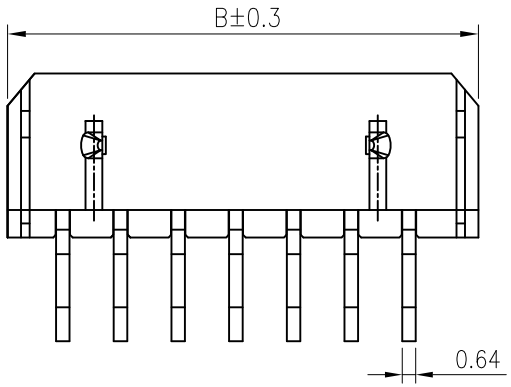

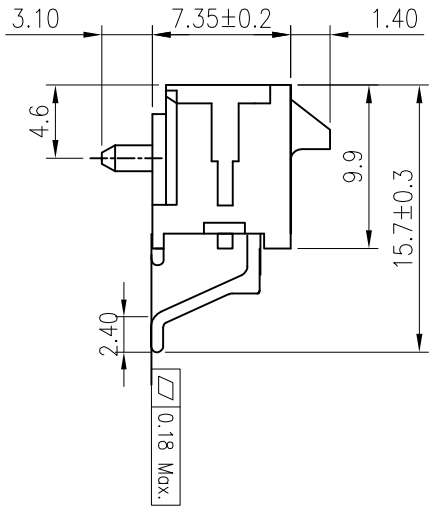

Material:
Insulator: PA46 UL 94V-0
Contact: Brass
Plating: Tin plated
Circuits: 2~24
Suitable: KR3000 series dual row Housing

C3000RS20230P42RL
202:2*2P
P4:PA46
1:管装
2:卷装

◆SPECIFICATIONS
- Current rating: 5A AC, DC
- Voltage rating: 250V AC,DC
- Temperature range: -25°C ~ +85°C
- Insulation resistance: 1000MΩ Min.
- Withstanding voltage: 1500V AC/ minute.
- Contact resistance: 10mΩ Max.

PART NO.	Dimensions	
	A	B
C3000RS20130LP3RL	——	6.65
C3000RS20230LP3RL	3.0	9.65
C3000RS20330LP3RL	6.0	12.65
C3000RS20430LP3RL	9.0	15.65
C3000RS20530LP3RL	12.0	18.65
C3000RS20630LP3RL	15.0	21.65
C3000RS20730LP3RL	18.0	24.65
C3000RS20830LP3RL	21.0	27.65
C3000RS20930LP3RL	24.0	30.65
C3000RS21030LP3RL	27.0	33.65
C3000RS21130LP3RL	30.0	36.65
C3000RS21230LP3RL	33.0	39.65

LTR	NAME	DATE	VERISION RECORD
4			
3			
2			
1			

GENERAL TOLERANCE		UNIT: mm		DATE
.X ±0.3	X° ±1°	DRAWN:		
.XX ±0.2	.X°	CHECKED:		
.XXX ±0.1		APPROVED:		

TITLE:
MX 3.0 SMT dual row 90°
Wafer with lock

VER.	SCALE:	N/A
A	SHEET:	1/1

东莞市丰特电子有限公司

PROJ	PART NO.	C3000RS***30P43RL
	DRAWING NO.	3000WHS204-3-S