REV.	ECN NO.	DATE	SIGN	DESCRIPTION
B	LEN17A0191~96	2017-10-23	Frank Deng	Update Drawing

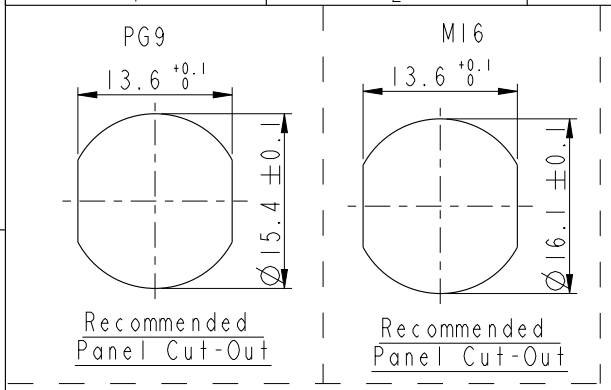

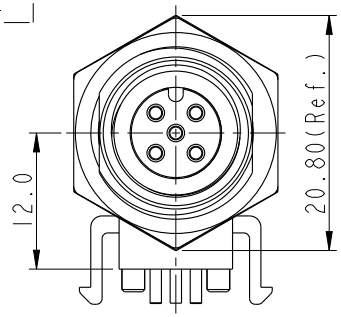

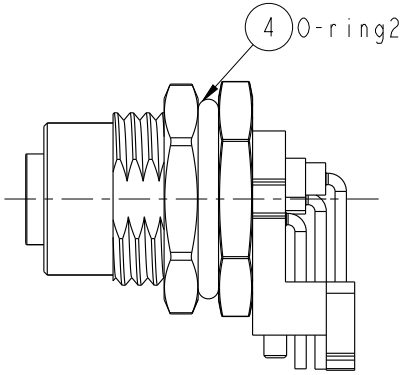

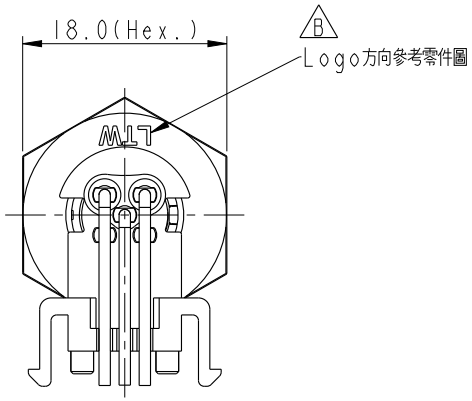

ALTW
CONFIDENTIAL
2017-10-23
R&D DEPT.

ALTW
DCC. DEPT.
CONFIDENTIAL
2017.10.25
ISSUED

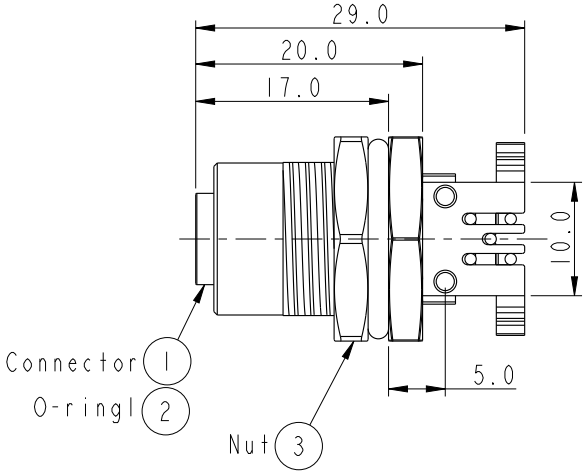

Note:
* QC Important Dimension To Check.
* Waterproof Rate: IP68.
  IP68: 1M Depth Of Water In 24hours.
* Connector: Nylon+GF, Black
* Female Pin: Copper Alloy, Gold Plated.
* Shell: Zinc Alloy,Nickel Plated.
* Nut: Zinc Alloy,Nickel Plated.
* O-ring1: Silicon, Gray.
* O-ring2: Silicon, Black.
* Boardlock: PBT+PC, Black.
* Rated Voltage: 3 & 4Pin 250V dc. or ac.
  5Pin 60V dc. or ac.
* Rated Current: 3~5Pin 4A
* For Panel Thickness Max. 4.5mm
* For PCB Thickness Max. 1.6mm

Item No.
M12A-03PFFR-SF8002
M12A-04PFFR-SF8002
M12A-05PFFR-SF8002
M12A-03PFFR-SF8001
M12A-04PFFR-SF8001
M12A-05PFFR-SF8001

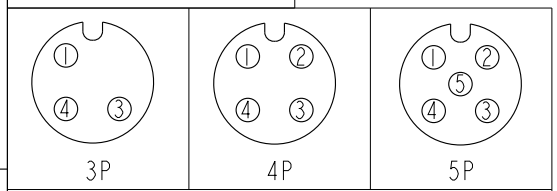

Pin Assignment Front View

UNIT: mm

TOLERANCE
.X ±0.25
.XX ±0.1
.XXX ±0.05
ANGLES ±1°

TITLE: M12 90° PANEL FCONN FPIN

SCALE 3:2 | SIZE A4 | SHEET 1 OF 2
REV. B | WC-REV. A.2 | QC: Inspection item

Amphenol LTW
安費諾亮泰企業股份有限公司

ITEM NO	DRAWN BY Frank Deng	DATE 2017-10-23
DWG NO M12A-XXPFFR-SF8XXX	CHECKED BY Fisher Wang	DATE 2017-10-23
CUSTOMER ALTW	APPROVED BY Kevin Hu	DATE 2017-10-23

THIS DOCUMENT IS SUBJECT TO CHANGE WITHOUT NOTICE. IT IS CONFIDENTIAL AND A PROPERTY OF Amphenol LTW. DISCLOSURE TO THIRD PARTY HAS TO BE AUTHORIZED BY Amphenol LTW.

M 12A - XX P F F R - S F 8 XXX

- 12A: A-Code
- 03: 3Pin / 04: 4Pin / 05: 5Pin
- P: Panel(板端)
- F: Female Connector (母座)
- F: Female Pin(母Pin)
- R: 90° PCB THT/DIP Type(90°基板插件式)
- S: Screw(螺紋式)
- F: Front Fasten(前鎖式/Enclosure Rear Mount)
- 8: IP68(防水等級68)
- 001: PG9
- 002: M16

ALTW
CONFIDENTIAL
2017-10-23
R&D DEPT.

ALTW
DCC. DEPT.
CONFIDENTIAL
2017.10.25
ISSUED

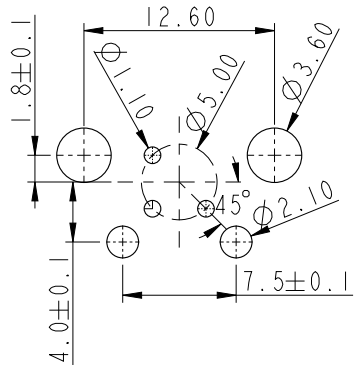

PCB Layout (3P)

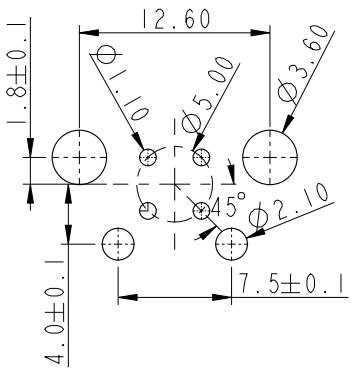

PCB Layout (4P)

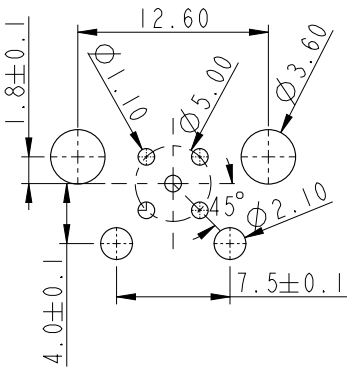

PCB Layout (5P)

UNIT: mm

TOLERANCE
.X ±0.25
.XX ±0.1
.XXX ±0.05
ANGLES ±1°

TITLE	M12 90° PANEL FCONN FPIN		
SCALE 3:2	SIZE A4	SHEET 2 OF 2	
REV. B	WC-REV. A.2	QC: Inspection item	

Amphenol LTW
安費諾亮泰企業股份有限公司

ITEM NO		DRAWN BY Frank Deng	DATE 2017-10-23
DWG NO M12A-XXPFFR-SF8XXX		CHECKED BY Fisher Wang	DATE 2017-10-23
CUSTOMER ALTW		APPROVED BY Kevin Hu	DATE 2017-10-23

FMW10702-01-02A1

THIS DOCUMENT IS SUBJECT TO CHANGE WITHOUT NOTICE. IT IS CONFIDENTIAL AND A PROPERTY OF Amphenol LTW. DISCLOSURE TO THIRD PARTY HAS TO BE AUTHORIZED BY Amphenol LTW.