HSF RoHS

SPECIFICATIONS
Rated Current:1.5AMP
Contact Resistance:20mΩ Max
Withstand Voltage:500V AC/DC
Insulation Resistance:1000MΩ Min
Operation Temperature:−40°c to +105°c

Contact Material:Brass
Contact Plating:Au or Sn Over Ni
Insulator Material:Polyester(UL94V−0)
Standard: PA6T
Max.Processing Temp: 230°C for 30−60 seconds
(260°C for 5 seconds)

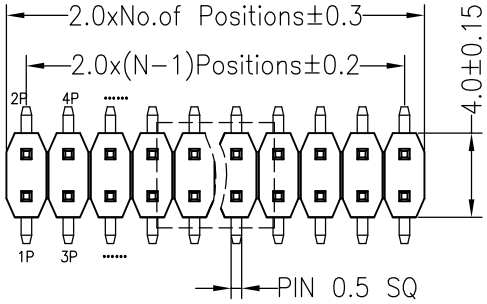

Recommended P.C.B Layout(Top Side)
(PCB BOARD TOLERANCE±0.05)

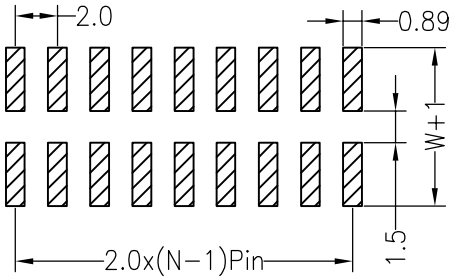

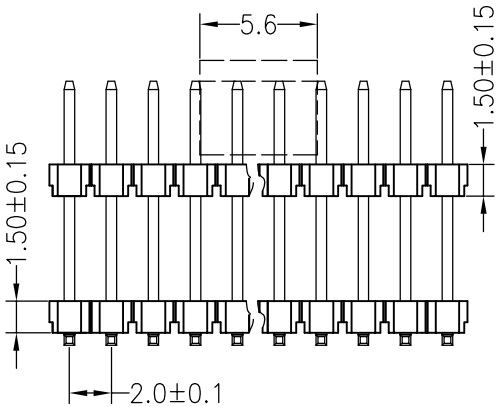

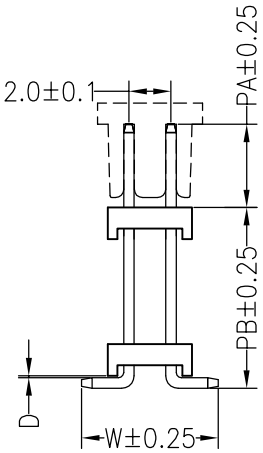

Dimension antitheses list					
ITEM	PA	D	PB	W	L
Alternate	6.00	0.10	17.00	6.90	26.00

REV	DATE	MODIFICATION DESCRIPTION	CHANGE
A0	2012.04.11	NEW DRAWING	

OPERATION	
X.X	±0.30
X.XX	±0.20
X.XXX	±0.10
Angle	±3°
DIM	TOL

DRAW	YiYuSheng	12.04.11
CHECK		
APPROVE		

SCALE	FIT
UNIT	mm
SIZE	A4
SHEET	1/1
PROJ.	

KLS ELECTRONIC CO., LTD

PART NO.	L-KLS1-218B-1.5-2-16-TC-T-6.9*6.0*17.0
TITLE:	2.0PH 2xNpin H1.5mm Dual Plastic SMT