FILE:

REV	E.C.N NO.	CONTENT	CHK	DATE
V1.0		ORIGINAL	LJ	15.09.26

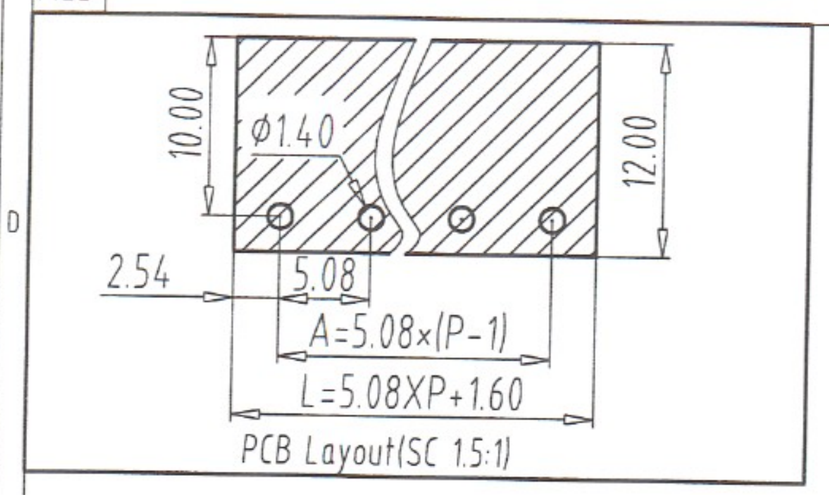

NOTES:

1. Rating:300V 16A(UL); 320V 20A (IEC)
2. Insulation Withstands Voltage: AC2000V/MIN;
3. Insulation Resistance: 500M Ω or more at DC500V;
4. Using Temperature Range: -40°C~+115°C ;
5. "★ ""☆" the important dimension;
6. RoHS compliance .
7. 特编说明：产品用于自动化插针（四方针材质：紫铜）

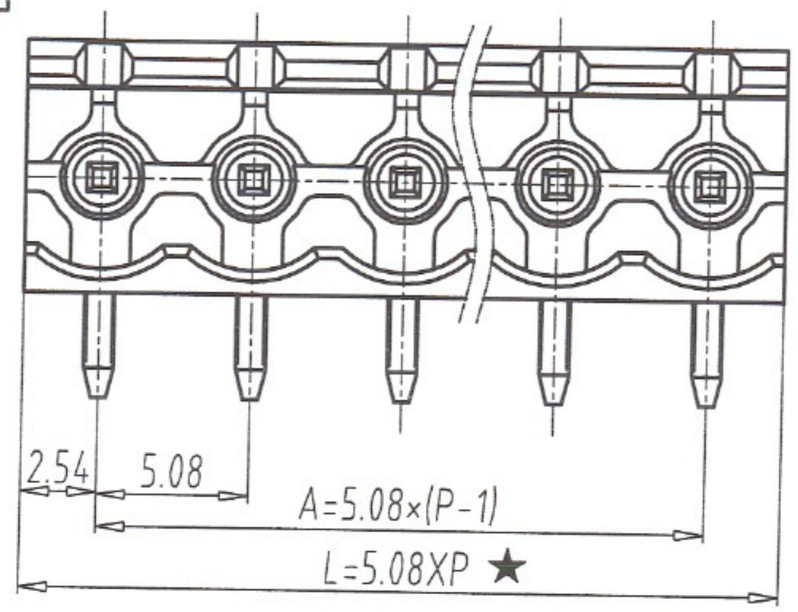

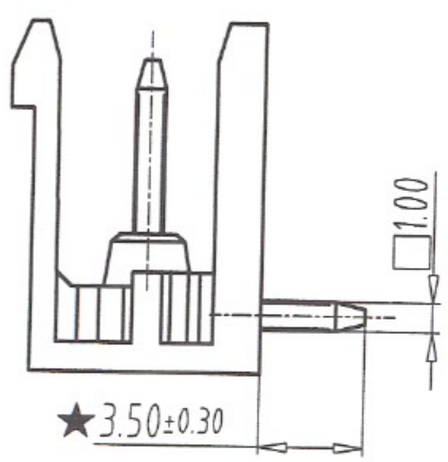

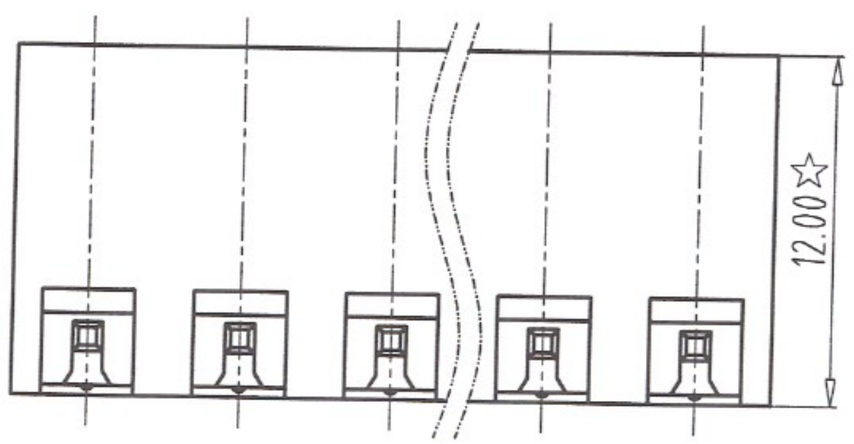

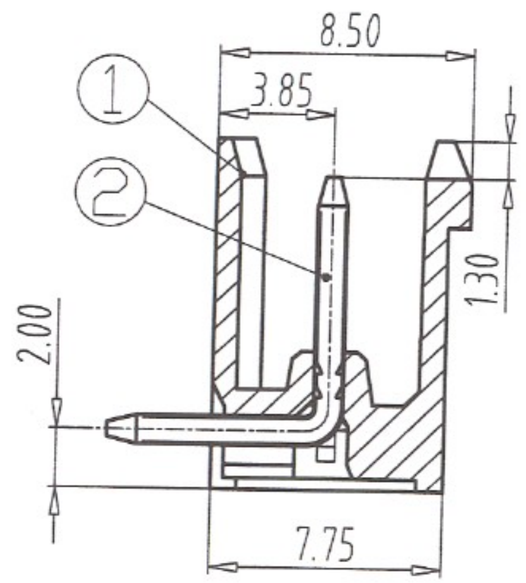

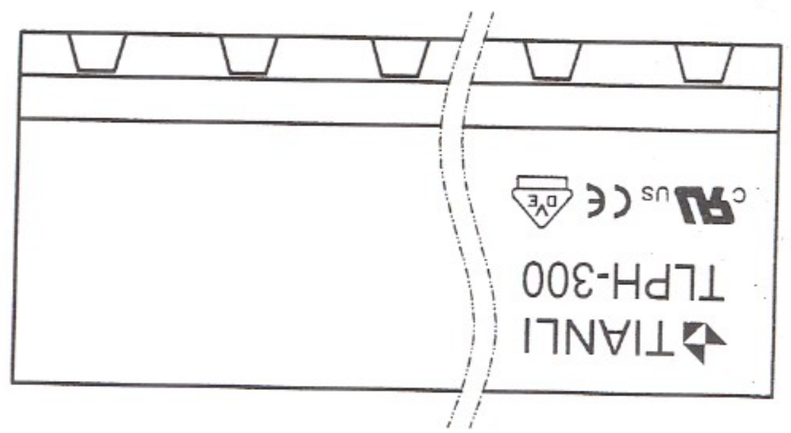

DIM \ P	2	3	4	5	6	7	8	9	10	11	12
L	10.16	15.24	20.32	25.4	30.48	35.56	40.64	45.72	50.8	55.88	60.96
A	5.08	10.16	15.24	20.32	25.4	30.48	35.56	40.64	45.72	50.8	55.88

DIM \ P	13	14	15	16	17	18	19	20	21	22	23	24
L	66.04	71.12	76.2	81.28	86.36	91.44	96.52	101.6	106.68	111.76	116.84	121.92
A	60.96	66.04	71.12	76.2	81.28	86.36	91.44	96.52	101.6	106.68	111.76	116.84

Total Pitch Tolerances in mm									Nominal dimension range in mm									⊥		÷	—	//	
over 0 to 30	over 30 to 53	over 53 to 70	over 70 to 90	over 90 to 115	over 115 to 150	over 150 to 200	over 200 to 250	over 250 to 320	over 0 to 30	over 30 to 53	over 53 to 70	over 70 to 90	over 90 to 115	over 115 to 150	over 150 to 200	over 200 to 250	over 250 to 320	over 0 to 10	over 10	all	over 0 to 100	over 100 to 150	over 150
±0.18	±0.20	±0.25	±0.3	±0.35	±0.44	±0.55	±0.70	±0.75	±0.20	±0.25	±0.30	±0.35	±0.44	±0.55	±0.70	±0.80	±0.90	0.2	0.3	0.3	0.2	0.3	0.5

ITEM	NAME OF PART	NO. OF PART	Q"TY	MATERIAL	NOTE
2	Solder Pin	TL017B0010	P	COPPER ALLOY	Sn plated
1	Housing	TL018G7XXX	1	PA66 (UL94-V0)	2P-24P

DWG.	LJ	DATE	15.09.26	UNITS	MM	SHEET/OF	1/1
CHK.	吴耀明	DATE	15.09.26	SCALE	2.5 : 1	A4	
APP.	王海军	DATE	15.09.26	NAME	TLPH-300R-1112-XXP-X		
	TIANLI ELECTRICAL MACHINERY(NINGBO)CO.,LTD.			DWGNO.	TL-02-TLPH300R1112XXPX		